Average-Price and Reachability-Price Games on Hybrid Automata with Strong Resets*

Patricia Bouyer[1], Thomas Brihaye[2], Marcin Jurdziński[3], Ranko Lazić[3], and Michał Rutkowski[3]

[1] LSV, CNRS & ENS de Cachan, France
[2] Institut de Mathématiques, University of Mons-Hainaut, Belgium
[3] Department of Computer Science, University of Warwick, UK

Abstract. We introduce and study hybrid automata with strong resets. They generalize o-minimal hybrid automata, a class of hybrid automata which allows modeling of complex continuous dynamics. A number of analysis problems, such as reachability testing and controller synthesis, are decidable for classes of o-minimal hybrid automata. We generalize existing decidability results for controller synthesis on hybrid automata and we establish new ones by proving that average-price and reachability-price games on hybrid systems with strong resets are decidable, provided that the structure on which the hybrid automaton is defined has a decidable first-order theory. Our proof techniques include a novel characterization of values in games on hybrid systems by optimality equations, and a definition of a new finitary equivalence relation on the states of a hybrid system which enables a reduction of games on hybrid systems to games on finite graphs.

1 Introduction

Hybrid systems and automata. Systems that exhibit both discrete and continuous behavior are referred to as *hybrid systems* [1]. Continuous changes to the system's state are interleaved with discrete ones, which may alter the constraints for future continuous behaviors. *Hybrid automata* are a formalism for modeling hybrid systems [2]. Hybrid automata are finite automata augmented with continuous real-valued variables. The discrete states can be seen as modes of execution, and the continuous changes of the variables as the evolution of the system's state over time. The mode specifies the continuous dynamics of the system, and mode changes are triggered by the changes in variable's values.

Verification and controller synthesis. Formal verification of hybrid systems is an active field of research in computer science (e.g. [3–7]). When augmented with price information, they can serve as models for resource consumption. The price does not constrain the behavior of the system, but gives quantitative information about it. This research

* This research was supported in part by EPSRC project EP/E022030/1.

directions ha recently received substantial attention. Timed automata[3] have been extended with price information [8, 9]. Similarly, the model of o-minimal[4] hybrid systems has been extended with price functions [10].

The designer of the system often lacks full control over its operation. The behavior of the system is a result of an interaction between a controller and the environment. This gives rise to the *controller synthesis* problem, where the goal is to design a program such that, regardless of the the environment's behavior, the system behaves correctly and optimally. A game-based approach to the controller synthesis problem was first proposed by Church [11], and was applied to hybrid automata [12, 10] and timed automata [13]. There are two players, *controller* and *environment*, and they are playing a zero-sum game. The game is played on the hybrid automaton and consists of rounds. In this paper, we use player Min to denote the controller and player Max to denote the environment. These are standard player names in zero-sum games. In each round, Min proposes a transition. Based on that, and in accordance with the game protocol, Max performs this or another transition.

Hybrid games with strong resets. We are considering a subclass of hybrid automata: hybrid automata with strong resets (HASR). In order to represent the automaton finitely, we require that all the components of the system are first-order definable over the ordered field of reals. The term "strong resets" comes from the property of the system that all the continuous variables are non-deterministically reset after each discrete transition. As opposed to timed automata, where flow rates are constant, and reseting of the variables upon a discrete transition is not compulsory [3], HASR allow for rich continuous dynamics [5, 10, 12]. In the game setting, we allow only for alternating sequences of timed and discrete transitions [12, 10]. Allowing an arbitrary number of continuous transitions prior to a discrete one, without the requirement of o-minimality, renders it impossible to construct a bisimulation of finite index [14, 15].

Contributions. We are considering hybrid games with strong resets which generalize the previously studied *o-minimal hybrid games* [12, 10]. The o-minimality assumption, together with the decidability of the first-order theory, was crucial in establishing previous decidability results [10].

For controller synthesis, only *reachability-price* games were studied so far [10]. However, the decidability result was limited to o-minimal hybrid games, where the price function is positive and non-decreasing. In this work, we extend the previous results to arbitrary price functions. Moreover, we show decidability of solving average-price games which, until now, were studied only in a discrete time setting [16].

In order to characterize the concept of *game value*, we use a technique of *optimality equations* [17]. For each game we introduce a set of equations. We prove that, if a pair of functions from the states to real numbers satisfies those equations, then the values of those functions are actually game values. We also show how to find solutions to such equations. This technique is new in the area of infinite state systems and we believe that its introduction contributes to the value of our results.

[4] O-minimality refers to the underlying algebraic structure. A structure is said to be *o-minimal* if every first-order definable subset of its domain is a finite union of points and intervals.

We introduce a new equivalence relation over the state space of the game. This equivalence is coarser then the previously considered in this context [12, 10] and also induces a finite bisimulation.

To compute solutions to the optimality equations, we construct a finite priced graph, using the introduced equivalence relation. We prove that we can derive solutions to the original problem from solutions to the finite problem. Both average-price and reachability-price games on finite graphs are known to be decidable.

It is worth noting that our results can be easily extended to *relaxed hybrid automata* [7], where the strong reset requirement is replaced by a requirement that every cycle in the control graph has a transition that resets all the variables. This extension can be achieved by a refinement of the equivalence relation and a minor modification of the finite graph obtained from it. We decided against considering this more general model, as it would have a negative impact on the clarity of presentation and exposition of our results.

Organization of the paper. The paper is organized as follows. Sec. 2 introduces notions of computability, definability, and zero-sum games. We recall the known results for finite average-price and reachability-price games. Sec. 3 introduces zero-sum hybrid games with strong resets. We characterize game values using optimality equations, and prove that if these equations have solutions then the games are determined and almost-optimal strategies exist. In the rest of the paper we are showing that the solutions to the optimality equations indeed exist. A finite abstraction over the state space of the hybrid game is introduced in Sec. 4. It is used to construct a finite priced game graph. In Sec. 5, we show that solutions to optimality equations for finite average-price and reachability-price games on this graph coincide with solutions to the optimality equations for their hybrid analogues.

2 Preliminaries

We introduce key notions and results that will be used further in the paper, such as computability, definability, decidability, and two-player zero-sum games on priced graphs. We also briefly summarize known results for average-price and reachability-price games on finite graphs.

Throughout the paper $\mathbb{R}_\infty$ denotes the set of real numbers augmented with positive and negative infinities, and $\mathbb{R}_+$ and $\mathbb{R}_\oplus$ denote the sets of positive and non-negative reals, respectively. If $G = (V, E)$ is a graph then for for a vertex v we write vE to denote the set $\{v' : (v, v') \in E\}$.

2.1 Computability and definability

Computability. Let $f : X \to \mathbb{R}$ be a partial function, which is defined on a set $D \subseteq X \subseteq \mathbb{R}^n$. We say that f is *computable* if $f(x)$ is rational for every rational $x \in D$, and there exists an algorithm that computes it given x. It is *approximately computable* if for every rational $x \in D$, and every $\varepsilon > 0$, we can compute a $y \in \mathbb{R}$ such that $|y - f(x)| < \varepsilon$. It is *decidable* if the following problem is decidable: given a rational

$x \in D$ and $c \in \mathbb{Q}$, decide whether $f(x) \leqslant c$. A set $X \subseteq \mathbb{R}^n$ is *decidable* if there is an algorithm that, given a rational x, can decide whether $x \in X$.

Proposition 1. *If a function is decidable then it is approximately computable. If a decidable set contains a rational element, then there is an algorithm that outputs one.*

Earlier definitions apply to the broadly accepted *Turing machine* model of computation. When dealing with real computation, the *Blume-Shub-Smale (BSS)* model [18, 19] can also be considered. In the BSS model all real numbers are among the valid inputs and outputs.

Definability. Let $\mathcal{M} = \langle \mathbb{R}, 0, 1, +, \cdot, \leqslant \rangle$ be the field of reals We will say that a set $X \subseteq \mathbb{R}^n$ is *definable* in $\mathcal{M}$ if it is *first-order definable* in $\mathcal{M}$. The *first-order theory of* $\mathcal{M}$ is the set of all first-order sentences that are true in $\mathcal{M}$. A well known result by Tarski [20] is that the first-order theory of the ordered field of reals is decidable.

It is possible to enrich the structure $\mathcal{M}$ with more operations (e.g., trigonometric functions, exponential function, etc.), but decidability of the respective first-order theory might be broken. Decidability of $\mathcal{M}$ is necessary to establish Cor. 19 and 21, and Thm 22. Unlike results in [6, 10, 12], definability over $\mathcal{M}$ is not necessary to establish determinacy and existence of almost-optimal strategies (Thms 7, 11, 17, and 20). These results are a direct consequence of the "strong reset" property mentioned in the introduction.

Note that, if a real partial function is definable it is decidable, and if a set is definable it is decidable.

2.2 Zero-sum games

Priced game graphs. Let S be a set of *states*, $\mathsf{E} \subseteq \mathsf{S} \times \mathsf{S}$ be an *edge relation*, and $\pi : \mathsf{E} \to \mathbb{R}$ a *price function*. A *priced game graph* is $\Gamma = ((\mathsf{S}, \mathsf{E}), \mathsf{S}^{\text{Min}}, \mathsf{S}^{\text{Max}}, \pi)$, where $\mathsf{S} = \mathsf{S}^{\text{Min}} \uplus \mathsf{S}^{\text{Max}}$. Note that S and E do not have to be finite or even countable.

A run of Γ is a sequence $\rho = \langle s_0, s_1, \ldots \rangle$ of elements of S, where $\rho(0) = s_0$ is called the initial state, and $(s_i, s_{i+1}) \in \mathsf{E}$ for all $i \in \mathbb{N}$. A finite run is a finite sequence $\rho = \langle s_0, \ldots, s_k \rangle$ of elements of S, satisfying the same conditions. We write Runs (Runs_{fin}) to denote the set of all runs (finite runs) of Γ.

Strategies. A *strategy* for player Min is a function $\mu : \text{Runs}_{\text{fin}} \to \mathsf{S}$, such that for every $\rho = \langle s_0, s_1, \ldots, s_n \rangle \in \text{Runs}_{\text{fin}}$, if $s_n \in \mathsf{S}^{\text{Min}}$ then $(s_n, \mu(\rho)) \in \mathsf{E}$. A *positional strategy* for player Min is a function $\mu : \mathsf{S}^{\text{Min}} \to \mathsf{S}$ that satisfies the same conditions. A positional strategy μ naturally induces the strategy $\text{Runs}_{\text{fin}} \ni \langle s_0, s_1, \ldots, s_n \rangle \mapsto \mu(s_n) \in \mathsf{S}$, which, for simplicity, we also refer to as μ. (Positional) strategies for player Max are defined analogously. We write Σ_{Min} and Σ_{Max} for the sets of strategies for player Min and Max, respectively, and we write Π_{Min} and Π_{Max} for the sets of their positional strategies. For $s \in \mathsf{S}$ and strategies $\mu \in \Sigma_{\text{Min}}$ and $\chi \in \Sigma_{\text{Max}}$, we define the run starting at s and following μ and χ by $\mathsf{Run}(s, \mu, \chi) = \langle s_0, s_1, s_2, \ldots \rangle$, where $s_0 = s$ and for all $i \geq 0$, $\mu(s_0, \ldots, s_i) = s_{i+1}$ if $s_i \in \mathsf{S}^{\text{Min}}$, and $\chi(s_0, \ldots, s_i) = s_{i+1}$ if $s_i \in \mathsf{S}^{\text{Max}}$.

Let $\mathsf{P}_* : \text{Runs} \to \mathbb{R}_\infty$ and $\mathsf{P}^* : \text{Runs} \to \mathbb{R}_\infty$ be *lower* and *upper payoff functions*, respectively. In a two-player zero-sum game, player Min wants to minimize the value

of P^* of a play and player Max wants to maximize the value of P_* of the play. We require that $\mathsf{P}^* \geqslant \mathsf{P}_*$, and if $\mathsf{P} = \mathsf{P}_* = \mathsf{P}^*$ then we call P the *payoff function*. Payoff functions define a *zero-sum game* on a priced game graph Γ.

Example 2. Let us consider a very simple priced game graph, consisting of one vertex and two edges. One of these edges bears a price of 0, and the other one the price of 1. For the sake of the definition completeness, we say that the set of vertices of player Min is empty.

If we use the average-price payoff functions (see Sec. 2.3 for the definition) and consider an infinite run ρ of the form $\underbrace{10}_{2\cdot 2^0}\underbrace{1100}_{2\cdot 2^1}\underbrace{11110000}_{2\cdot 2^2}\ldots$ one can see, after a brief calculation, that $\mathsf{P}_*(\rho) = 1/2$ which is not equal to $\mathsf{P}^*(\rho) = 2/3$.

Determinacy. We define lower value $\mathsf{Val}_*(s) = \sup_{\chi\in\Sigma_{\text{Max}}} \inf_{\mu\in\Sigma_{\text{Min}}} \mathsf{P}_*(\mathsf{Run}(s,\mu,\chi))$, and upper value $\mathsf{Val}^*(s) = \inf_{\mu\in\Sigma_{\text{Min}}} \sup_{\chi\in\Sigma_{\text{Max}}} \mathsf{P}^*(\mathsf{Run}(s,\mu,\chi))$, for all $s \in \mathsf{S}$. Note that $\mathsf{Val}_* \leqslant \mathsf{Val}^*$, and if these values are equal, then we will refer to them as the value of the game from this state, denoted by $\mathsf{Val}(s)$. We will also say that the game from this state is *determined*. We say that it is *positionally determined*, if $\mathsf{Val}(s) = \sup_{\chi\in\Pi_{\text{Max}}} \inf_{\mu\in\Sigma_{\text{Min}}} \mathsf{P}_*(\mathsf{Run}(s,\mu,\chi)) = \inf_{\mu\in\Pi_{\text{Min}}} \sup_{\chi\in\Sigma_{\text{Max}}} \mathsf{P}^*(\mathsf{Run}(s,\mu,\chi))$.

For all $\mu \in \Sigma_{\text{Min}}$ and $s \in \mathsf{S}$, we define $\mathsf{Val}^\mu(s) = \sup_{\chi'\in\Sigma_{\text{Max}}} \mathsf{P}^*(\mathsf{Run}(s,\mu,\chi'))$. Analogously, for $\chi \in \Sigma_{\text{Max}}$ we define $\mathsf{Val}_\chi(s) = \inf_{\mu'\in\Sigma_{\text{Min}}} \mathsf{P}_*(\mathsf{Run}(s,\mu',\chi))$. For $\varepsilon > 0$, we say that $\mu \in \Sigma_{\text{Min}}$ is *ε-optimal* if for every $s \in \mathsf{S}$, we have that $\mathsf{Val}^\mu(s) \leqslant \mathsf{Val}^*(s) + \varepsilon$. We define ε-optimality of strategies for Max analogously.

Decidability and computability. We will say that a zero-sum game on a game graph Γ is *decidable* if the partial function $\mathsf{Val} : \mathsf{S} \to \mathbb{R}$ is decidable. A game has *computable ε-optimal strategies* if there exist ε-optimal strategies for both players, which are computable.

2.3 Average-price and reachability-price games on finite graphs

We recall the known results that will be used later, when discussing hybrid games. We characterize the game values using optimality, equations and recall strategy improvement algorithms, used for finding solutions to these equations. The games are determined (Thms 3 and 4), decidable and have computable optimal strategies (Cor. 5).

Average-price games. The goal of player Min in the *average-price game* on Γ is to minimize an average price per step in a run, and the goal of player Max is to maximize it. For every run $\rho = \langle s_0, s_1, s_2, \ldots\rangle$, we define $\mathsf{P}_*(\rho) = \liminf_{n\to\infty}(1/n)\sum_{i=0}^{n-1}\pi(s_i,s_{i+1})$, and $\mathsf{P}^*(\rho) = \limsup_{n\to\infty}(1/n)\sum_{i=0}^{n-1}\pi(s_i,s_{i+1})$.

Optimality equations for average-price games. Let Γ be a priced game graph, and let $G, B : \mathsf{S} \to \mathbb{R}$. We say that the pair of functions (G, B) is a solution of *optimality equations* for the average-price game Γ, denoted by $(G, B) \models \text{Opt}_{\text{Avg}}(\Gamma)$, if the following conditions hold for all states $s \in \mathsf{S}^{\text{Min}}$:

$$G(s) = \min_{(s,s')\in\mathsf{E}}\{G(s')\}, \quad B(s) = \min_{(s,s')\in\mathsf{E}}\big\{\pi(s,s') - G(s) + B(s') : G(s') = G(s)\big\},$$

and the analogous two equations hold, with $\max$ instead of $\min$ in both, for all $s \in \mathsf{S}^{\text{Max}}$. The two functions G and B are called *gain* and *bias*, cf. [17]. Solutions of the gain-bias optimality equations for a finite game graph always exist and they are used to establish positional determinacy of average-price games. For every state $s \in \mathsf{S}$, the gain of s is uniquely determined by optimality equations and it is equal to the value of the average-price game starting from s.

Theorem 3. *For every* finite *priced game graph Γ, there is a pair of functions $G, B : \mathsf{S} \to \mathbb{R}$, such that $(G, B) \models \mathit{Opt}_{\mathit{Avg}}(\Gamma)$, and for every state $s \in \mathsf{S}$, the average-price game Γ from s is determined and $\mathsf{Val}(s) = G(s)$. Both players have positional optimal strategies.*

Reachability-price games. A *reachability-price game* (Γ, F) consists of a priced game graph Γ and a set of *final* states $\mathsf{F} \subseteq S$. The goal of player Min is to reach a final state and the goal of player Max is to prevent it. Moreover, player Min wants to minimize the total price of reaching a final state, while player Max wants to maximize it. For a run $\rho = \langle s_0, s_1, s_2, \ldots \rangle$, we define $\mathsf{Stop}(\rho) = \inf_n \{s_n \ : \ s_n \in \mathsf{F}\}$. The reachability-price payoff $\mathsf{P}(\rho)$ of the run $\rho = \langle s_0, s_1, s_2, \ldots \rangle$ is defined by $\mathsf{P}(\rho) = \sum_{i=0}^{\mathsf{Stop}(\rho)-1} \pi(s_i, s_{i+1})$ if $\mathsf{Stop}(\rho) < \infty$, and $\mathsf{P}(\rho) = \infty$ otherwise.

Optimality equations for reachability-price games. Let $P : \mathsf{S} \to \mathbb{R}$ and $D : \mathsf{S} \to \mathbb{N}$. We say that (P, D) is a solution of the *optimality equations* for the reachability-price game (Γ, F), denoted by $(P, D) \models \text{Opt}_{\text{Reach}}(\Gamma, \mathsf{F})$, if the following conditions hold for all states $s \in \mathsf{S}$. If $s \in \mathsf{F}$ then $P(v) = D(v) = 0$; if $s \in \mathsf{S}^{\text{Min}} \setminus \mathsf{F}$ then

$$P(s) = \min_{(s,s') \in \mathsf{E}} \{\pi(s, s') + P(s')\},$$
$$D(s) = \min_{(s,s') \in \mathsf{E}} \big\{1 + D(s') \ : \ P(s) = \pi(s, s') + P(s')\big\},$$

and the analogous two equations hold, with $\max$ instead of $\min$, for all $s \in S^{\text{Max}} \setminus \mathsf{F}$. Intuitively, in the equations above, $P(s)$ and $D(s)$ capture "optimal price to reach a final state" and "optimal number of steps to reach a final state with optimal price" from state $s \in \mathsf{S}$, respectively.

Let $W^{\text{Max}} \subseteq \mathsf{S}$ be the set of non-final states from which player Max can prevent ever reaching a final state. This set can be easily computed in time $O(|\mathsf{S}| + |\mathsf{E}|)$ for a finite game graph Γ. Moreover, let $W^{\text{Min}} \subseteq \mathsf{S} \setminus W^{\text{Max}}$ be the set of states which have a negative value in the average-price game obtained from Γ by removing all states from the set W^{Max}. It is easy to argue that for all $s \in W^{\text{Max}}$, we have $\mathsf{Val}(s) = +\infty$, and for all $s \in W^{\text{Min}}$, we have $\mathsf{Val}(s) = -\infty$. Let $\mathsf{S}^{\text{fin}} = \mathsf{S} \setminus (W^{\text{Max}} \cup W^{\text{Min}})$ and let Γ^{fin} be the priced game graph obtained from Γ by restricting to the set of states S^{fin}.

Theorem 4. *For every* finite *priced game graph Γ, there is a pair of functions $P : \mathsf{S}^{\mathit{fin}} \to \mathbb{R}$ and $D : \mathsf{S}^{\mathit{fin}} \to \mathbb{N}$, such that $(P, D) \models \mathit{Opt}_{\mathit{Reach}}(\Gamma^{\mathit{fin}}, \mathsf{F})$, and for every state $s \in \mathsf{S}^{\mathit{fin}}$, the reachability-price game Γ from s is determined and $\mathsf{Val}(s) = P(s)$.*

Strategy improvement algorithms [17, 13, 21] can be used to prove Thms 3 and 4, and to compute solutions of optimality equations $\text{Opt}_{\text{Avg}}(\Gamma)$ and $\text{Opt}_{\text{Reach}}(\Gamma^{\text{fin}}, \mathsf{F})$.

Corollary 5. *Average-price and reachability-price games on finite priced game graphs are decidable and have computable optimal strategies.*

3 Games on hybrid automata with strong resets

We introduce hybrid automata with strong resets and define zero-sum hybrid games on these automata, which fit in the general framework presented in Sec. 2.2. The key result is that optimality equations characterize the game values of average-price and reachability-price hybrid games (Thms 7 and 11). This allows us to later prove the main result of this paper, i.e., that these games are positionally determined and decidable.

Our definition of a hybrid automaton varies from that used in [12, 10], as we hide the dynamics of the system into guard functions. This approach allows for cleaner and more succinct notation and exposition, without loss of generality.

Priced hybrid automata with strong resets. Let L be a finite set of *locations*. Fix $n \in \mathbb{N}$ and define the set of *states* $\mathsf{S} = \mathsf{L} \times \mathbb{R}^n$. Let A be a finite set of *actions* and define the set of *times* $\mathsf{T} = \mathbb{R}_\oplus$ We refer to action-time pairs $(a, t) \in \mathsf{A} \times \mathsf{T}$ as *timed actions*. A *priced hybrid automaton with strong resets (PHASR)* $\mathcal{H} = \langle \mathsf{L}, \mathsf{A}, \mathsf{G}, \mathsf{R}, \pi \rangle$ consists of finite sets L of *locations* and A of *actions*, a *guard* function $\mathsf{G} : \mathsf{A} \to 2^{\mathsf{S} \times \mathsf{T}}$, a *reset* function $\mathsf{R} : \mathsf{A} \to 2^{\mathsf{S}}$, and a continuous *price* function $\pi : \mathsf{S} \times (\mathsf{A} \times \mathsf{T}) \to \mathbb{R}$. We say that $\mathcal{H}$ is a *definable PHASR* if the sets G, R, and the function π are definable.

For states $s, s' \in \mathsf{S}$ and a timed action $(a, t) \in \mathsf{A} \times \mathsf{T}$, we write $s \xrightarrow{a}_t s'$ iff $(s, t) \in \mathsf{G}(a)$ and $s' \in \mathsf{R}(a)$. If $s, s' \in \mathsf{S}$, $\tau = (a, t) \in \mathsf{A} \times \mathsf{T}$, and $s \xrightarrow{a}_t s'$ then we write $s \xrightarrow{\tau} s'$. We define the *move* function $\mathsf{M} : \mathsf{S} \to 2^{\mathsf{A} \times \mathsf{T}}$ by $\mathsf{M}(s) = \{(a, t) : (s, t) \in \mathsf{G}(a)\}$. Note that M is definable if G is definable. A *run* from state $s \in \mathsf{S}$ is a sequence $\langle s_0, \tau_1, s_1, \tau_2, s_2, \ldots \rangle \in \mathsf{S} \times ((\mathsf{A} \times \mathsf{T}) \times \mathsf{S})^\omega$, such that $s_0 = s$, and for all $i \geq 0$, we have $s_i \xrightarrow{\tau_{i+1}} s_{i+1}$.

We say that the hybrid automaton is *price-bounded* if there exists a constant $B \geq 0$, such that for all $s \in \mathsf{S}$ and $\tau \in \mathsf{M}(s)$, we have $|\pi(s, \tau)| \leq B$. For technical convenience, we only consider price-bounded hybrid automata in this paper. Without it, it would be necessary to account for non-determinacy. This would have a negative effect on clarity of the paper.

Hybrid games with strong resets. A *hybrid game with strong resets (HGSR)* $\Gamma = \langle \mathcal{H}, \mathsf{M}^{\text{Min}}, \mathsf{M}^{\text{Max}} \rangle$ consists of a PHASR $\mathcal{H} = \langle \mathsf{L}, \mathsf{A}, \mathsf{G}, \mathsf{R}, \pi \rangle$, a *Min-move* function $\mathsf{M}^{\text{Min}} : \mathsf{S} \to 2^{\mathsf{A} \times \mathsf{T}}$ and a *Max-move* function $\mathsf{M}^{\text{Max}} : \mathsf{S} \times (\mathsf{A} \times \mathsf{T}) \to 2^{\mathsf{A} \times \mathsf{T}}$. We require that for all $s \in \mathsf{S}$, we have $\mathsf{M}^{\text{Min}}(s) \subseteq \mathsf{M}(s)$, and that for all $\tau \in \mathsf{M}^{\text{Min}}(s)$, we have $\mathsf{M}^{\text{Max}}(s, \tau) \subseteq \mathsf{M}(s)$. W.l.o.g., we assume that for all $s \in \mathsf{S}$, we have $\mathsf{M}^{\text{Min}}(s) \neq \emptyset$, and that for all $\tau \in \mathsf{M}^{\text{Min}}(s)$, we have $\mathsf{M}^{\text{Max}}(s, \tau) \neq \emptyset$. If $\mathcal{H}$ and the move functions are definable then, we say that Γ is *definable*.

A hybrid game with strong resets is played in rounds. In every round, the following three steps are performed by the two players Min and Max from the current state $s \in \mathsf{S}$.

1. Player Min proposes a timed action $\tau \in \mathsf{M}^{\text{Min}}(s)$.
2. Player Max responds by choosing a timed action $\tau' = (a', t') \in \mathsf{M}^{\text{Max}}(s, \tau)$.

3. Player Max chooses a state $s' \in \mathsf{R}(a')$, i.e., such that $s \xrightarrow{\tau'} s'$. The state s' becomes the current state for the next round.

A *play* of the game Γ from state $s \in \mathsf{S}$ is a sequence $\langle s_0, \tau_1, \tau_1', s_1, \tau_2, \tau_2', s_2, \ldots\rangle \in \mathsf{S} \times ((\mathsf{A} \times \mathsf{T}) \times (\mathsf{A} \times \mathsf{T}) \times \mathsf{S})^\omega$, such that $s_0 = s$, and for all $i \geq 0$, we have $\tau_{i+1} \in \mathsf{M}^{\text{Min}}(s_i)$ and $\tau_{i+1}' \in \mathsf{M}^{\text{Max}}(s_i, \tau_{i+1})$. Note that if $\langle s_0, \tau_1, \tau_1', s_1, \tau_2, \tau_2', s_2, \ldots\rangle$ is a play then the sequence $\langle s_0, \tau_1', s_1, \tau_2', s_2, \ldots\rangle$ is a run of the hybrid automaton $\mathcal{H}$.

A hybrid game with strong resets can be viewed as a game on a priced game graph. The set of states S' is a subset of: $\mathsf{S} \cup (\mathsf{S} \times (\mathsf{A} \times \mathsf{T})) \cup ((\mathsf{A} \times \mathsf{T}))$. The E' relation is defined as follows: $(s, (s, \tau)) \in \mathsf{E}'$ iff $\tau \in \mathsf{M}^{\text{Min}}(s)$, and $((s, \tau), \tau') \in \mathsf{E}$ iff $\tau' \in \mathsf{M}^{\text{Max}}(s, \tau)$, and $((a', t'), s') \in \mathsf{E}'$ iff $s' \in \mathsf{R}(a')$. We define $\Gamma' = ((\mathsf{S}', \mathsf{E}'), \mathsf{S}, \mathsf{S}' \setminus \mathsf{S}, \pi')$, where $\pi'((s, \tau), (a', t')) = \pi(s, t')$, and 0 for all other edges. Additionally we require that $\mathsf{S}' \setminus \mathsf{S}$ contains all states reachable from S and does not contain those that are not. For all $(a, t), (a', t') \in \mathsf{S}'$, if $a = a'$ then $(a, t)E' = (a', t')E'$.

It is clear that plays of Γ directly correspond to runs on Γ'. Moreover, any run of Γ' uniquely determines a run of $\mathcal{H}$. To recall the definitions of strategies, payoff functions and game values, see Sec. 2.2. We define payoffs of Γ' runs as functions of the uniquely determined $\mathcal{H}$ runs.

In the following, we lift the concept of reachability-price and average-price games, as defined in Sec. 2.3, to hybrid games with strong resets. We show that values of these games are characterizable by optimality equations and we argue that if the game is determined, ε-optimal positional strategies are definable.

Average-price hybrid games. The goals of players Min and Max in an average-price game are to minimize and maximize, respectively, the average price per round of a play. This corresponds to defining the lower and upper payoffs as follows. For a run $\rho = \langle s_0, s_1, \ldots\rangle$ of $\mathcal{H}$, we define the lower payoff P_* and the upper payoff P^* by

$$\mathsf{P}_*(\rho) = \liminf_{n\to\infty} \frac{1}{n} \sum_{i=0}^{n-1} \pi(s_i, \tau_{i+1}), \qquad \mathsf{P}^*(\rho) = \limsup_{n\to\infty} \frac{1}{n} \sum_{i=0}^{n-1} \pi(s_i, \tau_{i+1}).$$

As we did in the case of finite game graphs (Thm 3), we prove determinacy and characterize the values of average-price games on hybrid automata with strong resets by optimality equations involving gain and bias. Let $G, B : \mathsf{S} \cup \big(\mathsf{S} \times (\mathsf{A} \times \mathsf{T})\big) \cup \mathsf{A} \to \mathbb{R}$. We say that (G, B) is a solution to *average-price optimality equations*, denoted by $(G, B) \models \text{Opt}_{\text{Avg}}(\Gamma)$, if the following equations hold for all $s \in S$. If $s \in \mathsf{S}$, then

$$G(s) = \min_{\tau \in \mathsf{M}^{\text{Min}}(s)} \{G(s, \tau)\}, \tag{1}$$

$$B(s) = \inf_{\tau \in \mathsf{M}^{\text{Min}}(s)} \{-G(s) + B(s, \tau) \ : \ G(s, \tau) = G(s)\}; \tag{2}$$

if $s \in \mathsf{S}$ and $\tau \in \mathsf{M}^{\text{Min}}(s)$, then

$$G(s, \tau) = \max_{(a', t') \in \mathsf{M}^{\text{Max}}(s, \tau)} \{G(a')\}, \tag{3}$$

$$B(s, \tau) = \sup_{(a', t') \in \mathsf{M}^{\text{Max}}(s, \tau)} \big\{\pi(s, a', t') - G(s, \tau) + B(a') \ : \ G(a') = G(s, \tau)\big\}; \tag{4}$$

and if $a \in \mathsf{A}$

$$G(a) = \max_{s \in \mathsf{R}(a)} \{G(s)\}, \qquad B(a) = \sup_{s \in \mathsf{R}(a)} \{-G(a) + B(s) \ : \ G(s) = G(a)\}.$$

Note that the above optimality equations refer to Γ', which allows us to model optimal choices that both players make in all steps of the hybrid game. Also note that in the definition of gain we use $\min$ and $\max$ rather than $\inf$ and $\sup$. This is valid because gain has a finite range, namely $G(\mathsf{A})$, and A is finite.

Remark 6. Observe that if Γ is definable then the left hand sides of the optimality equations are definable functions of the right hand side arguments.

Theorem 7. *If $(G, B) \models \mathit{Opt}_{\mathit{Avg}}(\Gamma)$ then for every state $s \in \mathsf{S}$, the average-price hybrid game Γ from s is determined and we have $\mathsf{Val}(s) = 3 \cdot G(s)$. Moreover, for every $\varepsilon > 0$, positional ε-optimal strategies exist for both players.*

The factor of 3 in the statement of Thm 7 is due to the fact that the value of gain is subtracted in each of the three bias equations. This is necessary because a round of a hybrid game Γ is encoded by a sequence of three edges in the finite graph $\widehat{\Gamma}$ (introduced in Sec. 4). This is a technical detail needed in the proof of Thm 17.

Corollary 8. *If there exists (G, B) such that $(G, B) \models \mathit{Opt}_{\mathit{Avg}}(\Gamma)$ and Γ definable then positional ε-optimal strategies are definable.*

The theorem and corollary follow from the following two lemmas and their proofs, which imply that for all states $s \in \mathsf{S}$, we have that $\mathsf{Val}^*(s) \leq 3 \cdot G(s)$ and $\mathsf{Val}_*(s) \geq 3 \cdot G(s)$, respectively.

Lemma 9. *Let $(G, B) \models \mathit{Opt}_{\mathit{Avg}}(\Gamma)$. Then for all $\varepsilon > 0$, there is $\mu_\varepsilon \in \Pi_{\mathit{Min}}$, such that for all $\chi \in \Sigma_{\mathit{Max}}$ and for all $s \in \mathsf{S}$, we have $\mathsf{P}^*(\mathsf{Play}(s, \mu_\varepsilon, \chi)) \leq 3 \cdot G(s) + \varepsilon$.*

Lemma 10. *Let $(G, B) \models \mathit{Opt}_{\mathit{Avg}}(\Gamma)$. Then for all $\varepsilon > 0$, there is $\chi_\varepsilon \in \Pi_{\mathit{Max}}$, such that for all $\mu \in \Sigma_{\mathit{Min}}$ and for all $s \in \mathsf{S}$, we have $\mathsf{P}_*(\mathsf{Play}(s, \mu, \chi_\varepsilon)) \geq 3 \cdot G(s) - \varepsilon$.*

We prove Lem. 9 by observing that for every $\varepsilon' > 0$, player Min can choose $\tau \in \mathsf{M}^{\mathrm{Min}}(s)$ in such away that: $G(s) = G(s, \tau)$ and $B(s) \geqslant B(s, \tau) - \varepsilon'$, We call this choice ε'-optimal. To complete the proof, we prove that if $\mu_\varepsilon \in \Pi^{\mathrm{Min}}$ is such that for every, $s \in \mathsf{S}$ $\mu_\varepsilon(s)$ is ε-optimal, then μ_ε is ε-optimal. The proof of Lem. 10 is similar.

Reachability-price hybrid games. A *hybrid reachability-price game with strong resets* (Γ, F) consists of a hybrid game with strong resets Γ and of a (definable) set $\mathsf{F} \subseteq S$ of *final* states.

For a run $\rho = \langle s_0, s_1, s_2, \ldots \rangle$ of $\mathcal{H}$, we define $\mathsf{Stop}(\rho) = \inf_n \{s_n \ : \ s_n \in \mathsf{F}\}$. The reachability-price payoff $\mathsf{P}(\rho)$ is defined by $\mathsf{P}(\rho) = \sum_{i=0}^{\mathsf{Stop}(\rho)-1} \pi(s_i, \tau_{i+1})$ if $\mathsf{Stop}(\rho) < \infty$, and $\mathsf{P}(\rho) = \infty$ otherwise.

As in the case of finite reachability-price games, we prove determinacy and characterize game values using optimality equations (Thm 4). We adapt the optimality equations in the same way as for average-price hybrid games. We write $(P, D) \models \mathrm{Opt}_{\mathrm{Reach}}(\Gamma, \mathsf{F})$ to denote a solution of the *reachability-price optimality equations*.

Theorem 11. *If $(P, D) \models Opt_{Reach}(\Gamma, \mathsf{F})$ then for every state $s \in \mathsf{S}$, the reachability-price hybrid game (Γ, F) from state s is determined and we have $\mathsf{Val}(s) = P(s)$. Moreover, for every $\varepsilon > 0$, positional ε-optimal strategies exist for both players.*

Corollary 12. *If there exists (P, D) such that $(P, D) \models Opt_{Reach}(\Gamma, \mathsf{F})$ and Γ definable then positional ε-optimal strategies are definable.*

4 A finite abstraction

We introduce a finitary equivalence relation over the state space of the hybrid game Γ. It is used to construct a finite priced game graph $\widehat{\Gamma}$.

For $s \in \mathsf{S}$ and $(a, t) \in \mathsf{M}^{\text{Min}}(s)$, we define

$$\mathsf{A}^{\text{Max}}(s, (a, t)) = \{a' \in \mathsf{A} \ : \ (a', t') \in \mathsf{M}^{\text{Max}}(s, (a, t)) \text{ for some } t' \in \mathsf{T}\},$$

i.e., $\mathsf{A}^{\text{Max}}(s, (a, t))$ is the set of actions $a' \in \mathsf{A}$, such that there is a valid response $(a', t') \in \mathsf{A} \times \mathsf{T}$ of player Max to the proposal (a, t) of player Min. For $s \in \mathsf{S}$ and $t \in \mathsf{T}$, let

$$\mathsf{A}^{\text{MinMax}}(s, t) = \big\{ \big(a, \mathsf{A}^{\text{Max}}(s, (a, t))\big) \ : \ (a, t) \in \mathsf{M}^{\text{Min}}(s) \big\},$$

i.e., the set $\mathsf{A}^{\text{MinMax}}(s, t)$ is the set of all pairs $(a, A') \in \mathsf{A} \times 2^{\mathsf{A}}$, such that player Min can propose the timed action (a, t) from state s, and the set of actions, appearing in valid responses of player Max to the proposal (a, t) of player Min, is exactly A'.

Let $\mathcal{R} = \{ R_1, R_2, \ldots, R_n \}$ be such that $R_i \subseteq \mathsf{S}$ for all i. For $s, s' \in \mathsf{S}$, we define $s \sim_{\mathcal{R}} s'$ to hold iff the following conditions are satisfied: for all $i = 1, 2, \ldots, n$, we have that $s \in R_i$ iff $s' \in R_i$; $\mathsf{A}^{\text{MinMax}}(s, \mathsf{T}) = \mathsf{A}^{\text{MinMax}}(s', \mathsf{T})$.

We will use $\mathcal{R} = \{\mathsf{R}(a)\}_{a \in \mathsf{A}}$ for average-price games and $\mathcal{R} = \{\mathsf{F}\} \cup \{\mathsf{R}(a)\}_{a \in \mathsf{A}}$ for reachability-price games. If the set $\mathcal{R}$ is understood from the context, or if for the purpose of our discussion the exact identity of the set $\mathcal{R}$ is not important then, we often write simply $\sim$ instead of $\sim_{\mathcal{R}}$. Note that the second condition in the definition of $\sim$ states that the functions $\mathsf{A}^{\text{MinMax}}(s, \cdot), \mathsf{A}^{\text{MinMax}}(s', \cdot) : \mathsf{T} \to \mathsf{A} \times 2^{\mathsf{A}}$ have the same ranges. Therefore, if $Q \in \mathsf{S}/{\sim}$, then it makes sense to set $\mathsf{A}^{\text{MinMax}}(Q, \mathsf{T})$ to be the range of the function $\mathsf{A}^{\text{MinMax}}(s, \cdot)$ for any $s \in Q$.

Remark 13. Observe that $\sim$ is an equivalence relation on the set of states S, and that there are finitely many equivalence classes of $\sim$. Moreover, if Γ is definable then every equivalence class is also definable.

From Γ to the finite game. The main goal of this section is to define a finite game graph $\widehat{\Gamma}$ whose plays correspond to sequences of rounds, each of which consists of the following steps. Let $a'' \in \mathsf{A}$ be the *current* action.

1. Max chooses $Q \in \mathsf{S}/{\sim}$ such that $Q \subseteq \mathsf{R}(a'')$.
2. Min chooses a pair $(a, A') \in \mathsf{A}^{\text{MinMax}}(Q, \mathsf{T})$.
3. Max chooses an action $a' \in A'$, which becomes the current action.

Note that, unlike in the hybrid game Γ, here in every step players make choices out of finite sets of options. It is instructive to think of mapping choices made by the players in steps 3, 1, and 2 of the hybrid game Γ to steps 1, 2, and 3 of the finite game $\widehat{\Gamma}$ in the following way.

1. Max's choice of $s \in \mathsf{R}(a'')$ is mapped to his choice of the equivalence class $[s]_{\sim}$.
2. Min's choice of $(a,t) \in \mathsf{M}^{\text{Min}}(s)$ is mapped to his choice of $\big(a, \mathsf{A}^{\text{Max}}(s,(a,t))\big)$.
3. Max's choice of $(a',t') \in \mathsf{M}^{\text{Max}}(s,(a,t))$ is mapped to his choice of a'.

The above finitary abstraction of choices made by players in every round of the hybrid game $\Gamma = (\mathcal{H}, \mathsf{M}^{\text{Min}}, \mathsf{M}^{\text{Max}})$ is formalized by the following finite game graph $\widehat{\mathcal{H}} = (\widehat{\mathsf{S}}, \widehat{\mathsf{E}})$, where:

$$\begin{aligned}
\widehat{\mathsf{S}} &= \mathsf{A} \,\cup\, \mathsf{S}/{\sim} \,\cup\, \big\{(Q,a,A') \,:\, Q \in \mathsf{S}/{\sim} \text{ and } (a,A') \in \mathsf{A}^{\text{MinMax}}(Q,\mathsf{T})\big\},\\
\widehat{\mathsf{E}} &= \big\{(a,Q) \,:\, Q \subseteq \mathsf{R}(a)\big\} \,\cup\, \big\{\big(Q,(Q,a,A')\big) \,:\, (a,A') \in \mathsf{A}^{\text{MinMax}}(Q,\mathsf{T})\big\}\\
&\qquad\qquad \cup \big\{\big((Q,a,A'),a'\big) \,:\, a' \in A'\big\}.
\end{aligned}$$

We define the finite game graph $\widehat{\Gamma} = (\widehat{\mathcal{H}}, \widehat{\mathsf{S}}^{\text{Min}}, \widehat{\mathsf{S}}^{\text{Max}}, \widehat{\pi})$, where $(\widehat{\mathsf{S}}^{\text{Min}}, \widehat{\mathsf{S}}^{\text{Max}})$ is a partition of $\widehat{\mathsf{S}}$ and $\widehat{\pi} : \widehat{\mathsf{E}} \to \mathbb{R}$ is a price function. Let $\widehat{\mathsf{S}}^{\text{Min}} = \mathsf{S}/{\sim}$ and let $\widehat{\mathsf{S}}^{\text{Max}} = \widehat{\mathsf{S}} \setminus \widehat{\mathsf{S}}^{\text{Min}}$. The price function $\widehat{\pi}$ is defined to be 0 for edges of the form (a,Q) or $\big(Q,(Q,a,A')\big)$, and for edges of the form $\big((Q,a,A'),a'\big)$ we define

$$\begin{aligned}
\widehat{\pi}\big((Q,a,A'),a'\big) \;&=\; \sup_{s \in Q} \;\inf_{t \in \mathsf{T}^{\text{Min}}_{s,(a,A')}} \;\sup_{t' \in \mathsf{T}^{\text{Max}}_{s,(a,t),a'}} \pi(s,(a',t')), \text{ where}\\
\mathsf{T}^{\text{Min}}_{s,(a,A')} &= \{t \in \mathsf{T} \,:\, (a,t) \in \mathsf{M}^{\text{Min}}(s) \text{ and } A' = \mathsf{A}^{\text{Max}}(s,(a,t))\},\\
\mathsf{T}^{\text{Max}}_{s,(a,t),a'} &= \{t' \in \mathsf{T} \,:\, (a',t') \in \mathsf{M}^{\text{Max}}(s,(a,t))\}.
\end{aligned}$$

The set $\mathsf{T}^{\text{Min}}_{s,(a,A')}$ is the set of times t, such that if Min proposes the timed action (a,t) from state s, then A' is the set of actions which occur in valid responses of Max. Similarly, the set $\mathsf{T}^{\text{Max}}_{s,(a,t),a'}$ is the set of times $t' \in \mathsf{T}$, for which the timed action (a',t') is a valid response of Max to the proposal (a,t) of Min.

Note that the value of $\widehat{\pi}$ always exists. This follows from the assumption that hybrid automata with strong resets under consideration are price-bounded.

Theorem 14. *If Γ is definable then the finite priced game graph $\widehat{\Gamma}$ is also definable.*

Discussion. In the hybrid game Γ, each step of a round has a hybrid nature, i.e., consists of both a discrete and a continuous component. In the first two steps, players Min and Max make a discrete choice of an action followed by a continuous choice of time. In the last step, player Max makes a discrete choice of an equivalence class (recall the $\sim$ equivalence), followed by a continuous choice of a state in that class.

The construction of $\widehat{\Gamma}$ is built upon an idea to separate the discrete and continuous choices of both players. This separation is achieved by reconstructing the round of a game in such a way that first players make their discrete choices (in three steps) and then they make their continuous choices, which must be sound with respect to the discrete choices made earlier.

In $\widehat{\Gamma}$, the discrete steps of the reconstructed round are encoded in the choices of edges. The continuous choices are not present, however. Instead, we set the prices of edges as if, after making the discrete choices, the players were making optimal continuous choices (with respect to the discrete ones). This reduces the problem of solving a hybrid game Γ to a finite problem. The correctness of this approach will follow from Thms 17 and 20, which can be found in Sec. 5.

Example 15. To make the construction of $\widehat{\Gamma}$ clearer, we provide a simple example. Let $V_1 = \{(x, y) : x + y \geqslant 10\}, V_2 = \mathbb{R}^2 \setminus V_1, V_3 = \{(x, y) : y + x^2 \leqslant 0\}, I_1 = (1, 2)$, $I_2 = (3, 4)$ and $I_3 = (5, 6)$. We define the hybrid automaton $\mathcal{H} = \langle \mathsf{L}, \mathsf{A}, \mathsf{G}, \mathsf{R}, \pi \rangle$ as follows: $\mathsf{L} = \{\ell\}$, $\mathsf{A} = \{a, b\}$, $\mathsf{S} = \mathsf{L} \times \mathbb{R}^2$, $\mathsf{G} = \{a\} \times (\mathsf{S} \times I_3) \cup \{b\} \times (\mathsf{L} \times V_3) \times I_2$, $\mathsf{R} = \mathsf{A} \times (\mathsf{L} \times V_1)$, and the price function is given by $\pi(x, y, \mathsf{A}, t) = -(t + x^2 + y^2)$. Fig 1(a-c) provides more insight into the definition of $\mathcal{H}$.

Recall that $\mathsf{M}(s) = \{(c, t) : (s, t) \in \mathsf{G}(c)\}$. We define Γ by setting $\mathsf{M}^{\text{Min}}(s) = \mathsf{M}(s) \cap \{a\} \times \mathsf{T}$ and if $t \in I_1$ then $\mathsf{M}^{\text{Max}}(s, a, t) = \{(a, t)\}$ otherwise, if $t \in I_3$ then $\mathsf{M}^{\text{Max}}(s, a, t) = \{(a, t)\} \cup \{b\} \times I_2$.

Now we can construct the equivalence $\sim_{\mathcal{R}}$, where $\mathcal{R} = \{\mathsf{R}(a), \mathsf{R}(b)\}$. All elements of $\mathsf{L} \times V_1$ are contained in both $\mathsf{R}(a)$ and $\mathsf{R}(b)$. If we look at the set $\mathsf{A}^{\text{MinMax}}(s, \mathsf{T})$ then it is easy to see that for all $s \in \mathsf{L} \times (V_1 \setminus V_3)$ it is equal to $\{(a, \{a\})\}$, and for all elements $s \in \mathsf{L} \times V_3$, to $\{(a, \{a\}), (a, \{a, b\})\}$. On the other hand, elements $s \in \mathsf{L} \times V_2$ are not contained in any set in $\mathcal{R}$, and the set $\mathsf{A}^{\text{MinMax}}(s, \mathsf{T})$ is alway equal to $\{(a, \{a\})\}$. This gives us three equivalence classes of $\sim_{\mathcal{R}}$, namely $Q_1 = \mathsf{L} \times V_3$, $Q_2 = \mathsf{L} \times (V_1 \setminus V_3)$ and $Q_3 = \mathsf{L} \times V_2$. The finite priced game graph $\widehat{\Gamma}$ obtained from Γ using $\sim_{\mathcal{R}}$ is depicted on Fig 1(d).

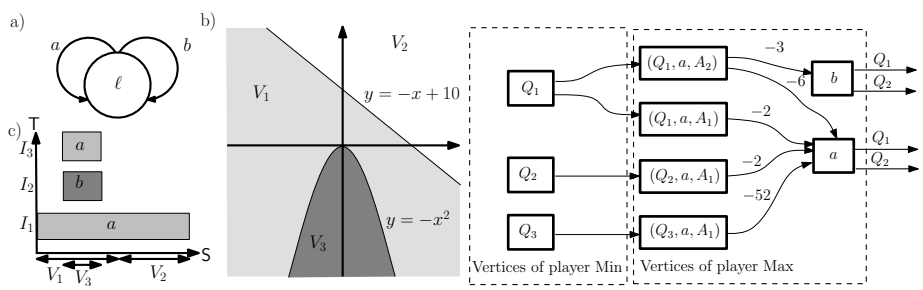

Fig. 1. a) Graph structure underlying $\mathcal{H}$. b) State space of $\mathcal{H}$. c) Guard function of $\mathcal{H}$. d) The priced game graph $\widehat{\Gamma}$ obtained from Γ through finite abstraction. A_1 stands for $\{(a, \{a\})\}$ and A_2 for $\{(a, \{a\}), (a, \{a, b\})\}$. Edge price is omitted when it is equal to zero.

5 Solving average-price and reachability-price games

The key result of this section is that solutions of optimality equations for the average-price game $\widehat{\Gamma}$ and for the reachability-price game $(\widehat{\Gamma}, \widehat{\mathsf{F}})$ on the finite priced game

graph $\widehat{\Gamma}$ coincide with the solutions of the optimality equations for the hybrid average-price game Γ and of the hybrid reachability-price game (Γ, F) respectively (Thms 17 and 20). In addition (by Thms 7 and 11) it follows that average-price and reachability-price hybrid games are positionally determined and decidable (Cor. 19 and 21).

Average-price games. The following are the optimality equations for the average-price game on the finite priced game graph $\widehat{\Gamma}$. For $Q \in S/{\sim} = \widehat{\mathsf{S}}^{\text{Min}}$, we have:

$$\widehat{G}(Q) = \min_{(Q,(Q,a,A'))\in\widehat{\mathsf{E}}} \{\widehat{G}(Q,a,A')\},$$
$$\widehat{B}(Q) = \min_{(Q,(Q,a,A'))\in\widehat{\mathsf{E}}} \{-\widehat{G}(Q) + \widehat{B}(Q,a,A') \ : \ \widehat{G}(Q) = \widehat{G}(Q,a,A')\};$$

for $(Q,a,A') \in (S/{\sim} \times \mathsf{A} \times 2^{\mathsf{A}}) \subseteq \widehat{\mathsf{S}}^{\text{Max}}$, we have:

$$\widehat{G}(Q,a,A') = \max_{((Q,a,A'),a')\in\widehat{\mathsf{E}}} \{\widehat{G}(Q,a,A')\},$$
$$\widehat{B}(Q,a,A') = \max_{((Q,a,A'),a')\in\widehat{\mathsf{E}}} \big\{\widehat{\pi}((Q,a,A'),a') - \widehat{G}(Q,a,A') + \widehat{B}(a') \ : \ \widehat{G}(Q,a,A') = \widehat{G}(a')\big\};$$

and for $a \in \mathsf{A} \subseteq \widehat{\mathsf{S}}^{\text{Max}}$, we have:

$$\widehat{G}(a) = \max_{(a,Q)\in\widehat{\mathsf{E}}} \{\widehat{G}(Q)\}, \qquad \widehat{B}(a) = \max_{(a,Q)\in\widehat{\mathsf{E}}} \{-\widehat{G}(a) + \widehat{B}(Q) \ : \ \widehat{G}(a) = \widehat{G}(Q)\}.$$

Our goal is to show that a solution $(\widehat{G}, \widehat{B})$ of $\text{Opt}_{\text{Avg}}(\widehat{\Gamma})$ can be used to obtain a solution (G, B) of $\text{Opt}_{\text{Avg}}(\Gamma)$. Recall that a solution of optimality equations $\text{Opt}_{\text{Avg}}(\Gamma)$ for a hybrid average-price game is a pair (G, B) of functions $G, B : \mathsf{S} \cup \big(\mathsf{S} \times (\mathsf{A} \times \mathsf{T})\big) \cup \mathsf{A} \to \mathbb{R}$.

Proposition 16. *If Γ is a hybrid average-price game, then for all states $s \in \mathsf{S}$ and for all $\tau \in \mathsf{M}^{Min}(s)$, the values $G(s), B(s), G(s,\tau)$, and $B(s,\tau)$ satisfying equations (1–4), respectively, are uniquely determined and first-order definable (provided that Γ is definable) from the (finitely many) values $\{G(a), B(a) \ : \ a \in \mathsf{A}\}$.*

Theorem 17. *Let Γ be a hybrid average-price game and let $(\widehat{G}, \widehat{B}) \models Opt_{Avg}(\widehat{\Gamma})$. If $G, B : \mathsf{S} \cup \big(\mathsf{S} \times (\mathsf{A} \times \mathsf{T})\big) \cup \mathsf{A} \to \mathbb{R}$ satisfy equations (1–4), and for all $a \in \mathsf{A}$, it holds that $G(a) = \widehat{G}(a)$ and $B(a) = \widehat{B}(a)$, then $(G, B) \models Opt_{Avg}(\Gamma)$.*

Example 18. Recall the game graph $\widehat{\Gamma}$ from Ex. 15. Fig 2 depicts the optimal choices of both players in the average-price game and the solution to the optimality equations for finite average-price games. The value of the game from every state is $-2/3$, because $(\widehat{G}, \widehat{B}) \models \text{Opt}_{\text{Avg}}(\widehat{\Gamma})$.

We use the solutions to $\text{Opt}_{\text{Avg}}(\widehat{\Gamma})$ to obtain solutions to $\text{Opt}_{\text{Avg}}(\Gamma)$. We set $G \equiv -\frac{2}{3}$, $B(a) = \widehat{B}(a) = 0$ and $B(b) = \widehat{B}(b) = 0$. The remaining values are uniquely

determined by these. One can see that the value of the average-price game on Γ is -2 and that the players have ε-optimal strategies as follows: from every state in Q_1 player Min should play $(a, 6-\varepsilon)$, and from every state in $Q_2 \cup Q_3$, Min should play $(a, 2-\varepsilon)$. Player Max on the other hand has always to play Min's choice unless he is in the state (s, a, t) and $t > 5$, when he should make the move $(b, 3+\varepsilon)$. From every state in A, Max should choose choose to play $(0, 0) \in Q_2$.

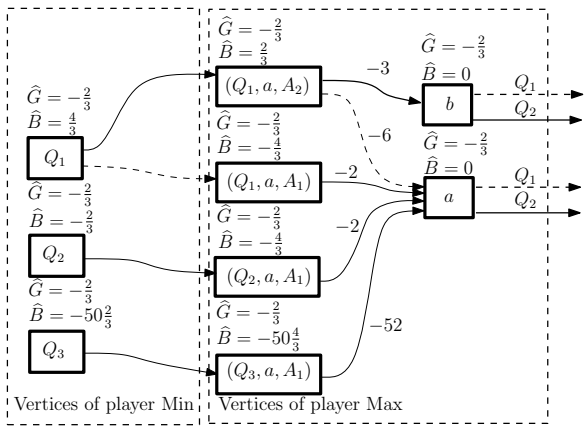

Fig. 2. Solid arrows denote the optimal strategies of both players. Above each vertex one can find its gain and bias.

Corollary 19. *Definable average-price hybrid games with strong resets are decidable.*

Reachability-price games. As in the case of average-price hybrid games the solutions to the optimality equations for the finite game $(\widehat{\Gamma}, \widehat{\mathsf{F}})$ coincide with the solutions to the optimality equations for the hybrid game (Γ, F). The main results are as follows, and is proved in a similar fashion as Thm 17.

Theorem 20. *Let $(\widehat{P}, \widehat{D}) \models \mathit{Opt}_{\mathit{Reach}}(\widehat{\Gamma}, \widehat{F})$, where (Γ, F) is a hybrid reachability-price game. If for all $a \in \mathsf{A}$, we set $P(a) = \widehat{P}(a)$ and $D(a) = \widehat{D}(a)$, then there are unique extensions of $P, D : \mathsf{A} \to \mathbb{R}$ to $P, D : \mathsf{S} \cup \big(\mathsf{S} \times (\mathsf{A} \times \mathsf{T})\big) \cup \mathsf{A} \to \mathbb{R}$ such that $(P, D) \models \mathit{Opt}_{\mathit{Reach}}(\Gamma, F)$.*

Corollary 21. *Definable reachability-price hybrid games with strong resets are decidable.*

Computability of ε-optimal strategies. Definable average-price and reachability-price admit ε-optimal strategies. We present the following computability result.

Theorem 22. *If Γ is a definable hybrid game with strong resets then, if in the average-price (reachability-price) game a player can always make a rational ε-optimal move, then ε-optimal strategies are computable.*

References

1. van der Schaft, A.J., H., S.: An introduction to hybrid dynamical systems. Volume 251 of Lecture Notes in Control and Information Sciences. Springer (1999)
2. Alur, R., Courcoubetis, C., Henzinger, T.A., Ho, P.H., Nicollin, X., Olivero, A., Sifakis, J., Yovine, S.: The algorithmic analysis of hybrid systems. Theoretical Computer Science **138** (1995) 3–34
3. Alur, R., Dill, D.: A theory of timed automata. Theoretical Computer Science **126** (1994) 183–235
4. Henzinger, T.A.: The theory of hybrid automata. In: Logic in Computer Science, LICS 1996, IEEE Computer Society Press (1996) 278–292
5. Lafferriere, G., Pappas, G.J., Sastry, S.: O-minimal hybrid systems. Mathematics of Control, Signals, and Systems **13** (2000) 1–21
6. Brihaye, T., Michaux, C.: On the expressiveness and decidability of o-minimal hybrid systems. Journal of Complexity **21** (2005) 447–478
7. Gentilini, R.: Reachability problems on extended o-minimal hybrid automata. In: Formal Modeling and Analysis of Timed Systems, FORMATS 2005. LNCS, Springer (2005) 162–176
8. Alur, R., La Torre, S., Pappas, G.J.: Optimal paths in weighted timed automata. In: Hybrid Systems: Computation and Control, HSCC 2001. Volume 2034 of LNCS., Springer (2001) 49–62
9. Behrmann, G., Fehnker, A., Hune, T., Larsen, K.G., Pettersson, P., Romijn, J., Vaandrager, F.: Minimum-cost reachability for priced timed automata. In: Hybrid Systems: Computation and Control, HSCC 2001. Volume 2034 of LNCS., Springer (2001) 147–161
10. Bouyer, P., Brihaye, T., Chevalier, F.: Weighted o-minimal hybrid systems are more decidable than weighted timed automata! In: Logical Foundations of Computer Science, LFCS 2007. Volume 4514 of LNCS., Springer (2007) 69–83
11. Church, A.: Logic, arithmetic and automata. In: Proceedings of the International Congress of Mathematicians. (1962) 23–35
12. Bouyer, P., Brihaye, T., Chevalier, F.: Control in o-minimal hybrid systems. In: Logic in Computer Science, LICS 2006, IEEE Computer Society Press (2006) 367–378
13. Jurdziński, M., Trivedi, A.: Reachability-time games on timed automata. In: International Colloquium on Automata, Languages and Programming, ICALP 2007. Volume 4596 of LNCS., Springer (2007) 838–849
14. Brihaye, T., Michaux, C., Rivière, C., Troestler, C.: On o-minimal hybrid systems. In: Hybrid Systems: Computation and Control, HSCC 2004. Volume 2993 of LNCS., Springer (2004) 219–233
15. Brihaye, Th.: A note on the undecidability of the reachability problem for o-minimal dynamical systems. Mathematical Logic Quarterly **52** (2006) 165–170
16. Adler, B.T., de Alfaro, L., M., F.: Average reward timed games. In: FORMATS'05. Volume 3829 of LNCS., Springer (2005) 65–80
17. Puterman, M.L.: Markov Decision Processes. Discrete Stochastic Dynamic Programming. Wiley (1994)
18. Meer, K., Michaux, C.: A survey on real structural complexity theory. Bulletin of the Belgian Mathematical Society. Simon Stevin **4** (1997) 113–148 Journées Montoises (Mons, 1994).
19. Blum, L., Shub, M., Smale, S.: On a theory of computation and complexity over the real numbers: NP-completeness, recursive functions and universal machines. American Mathematical Society. Bulletin. New Series **21** (1989) 1–46
20. Tarski, A.: A Decision Method for Elementary Algebra and Geometry. University of California Press (1951)
21. Filar, J., Vrieze, K.: Competitive Markov Decision Processes. Springer (1997)